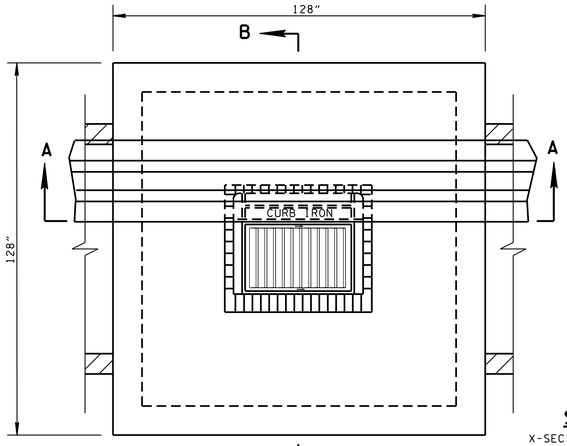

PLAN VIEW

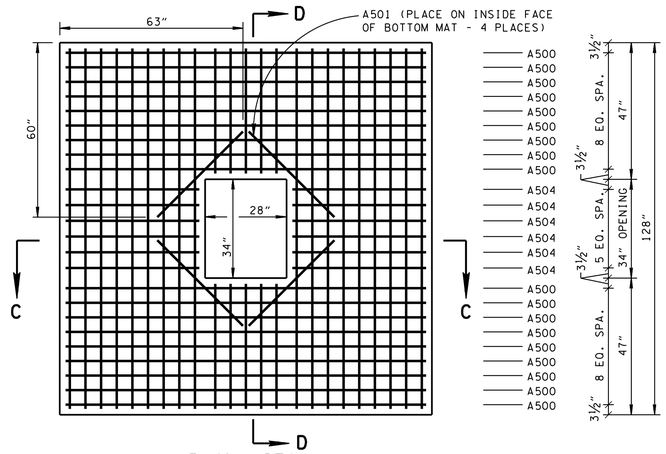

PLAN VIEW

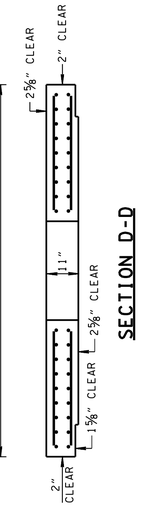

SECTION D-D

SECTION *-*

X-SECT. VIEW IS PROVIDED ON STANDARD DRAWING D-CB-99 SHOWING REINFORCEMENT REQUIREMENTS AROUND PIPE OPENINGS

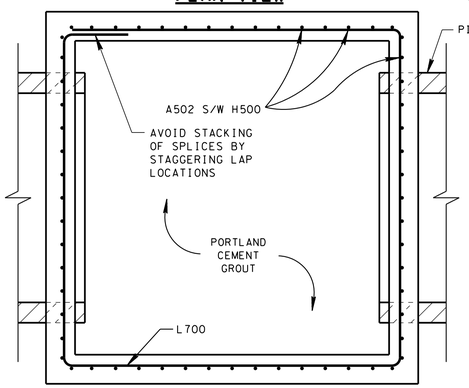

SECTION E-E

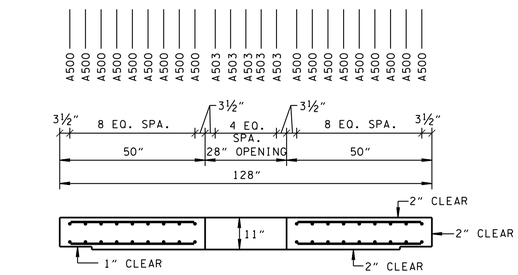

SECTION C-C

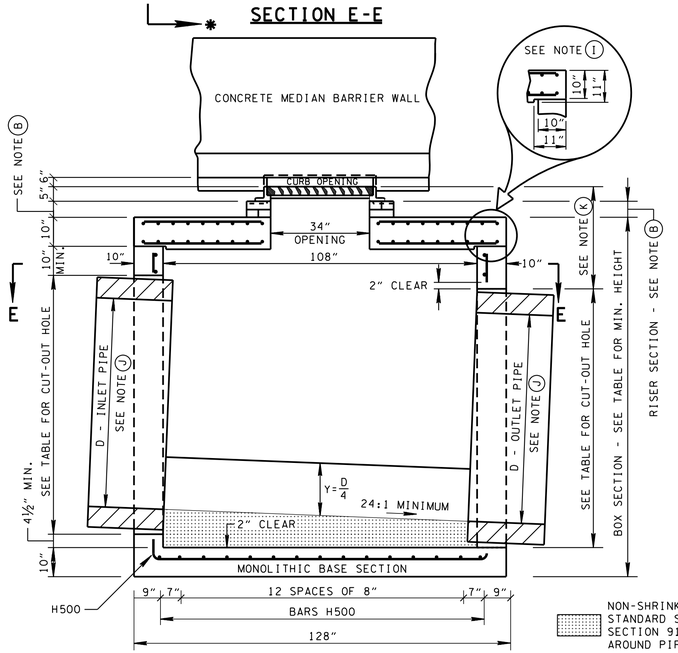

SECTION A-A

NON-SHRINK GROUT PER STANDARD SPECIFICATIONS SECTION 918 REQUIRED AROUND PIPE OPENINGS ONLY

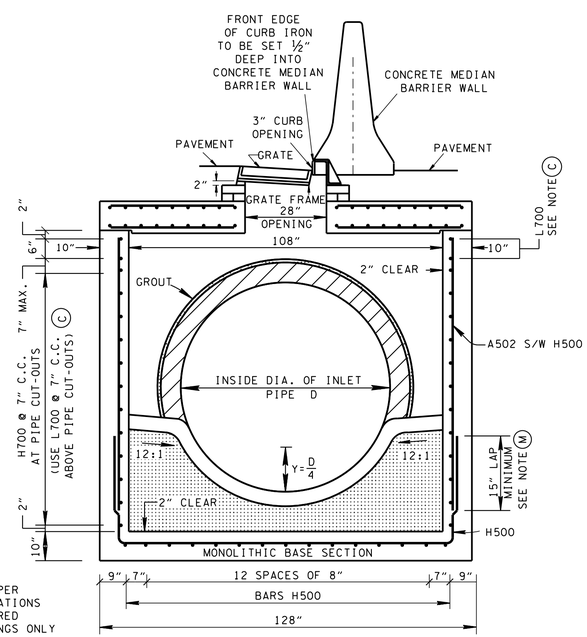

SECTION B-B

CATCH BASIN MAXIMUM DEPTH NOTE

MAXIMUM DEPTH FOR THIS STRUCTURE IS 28.00'.

CATCH BASIN DIMENSIONS

INSIDE DIAMETER (D) OF PIPE (INCHES)	PIPE WALL THICKNESS (INCHES)	DIAMETER OF CUT-OUT HOLES (INCHES)	BOX SECTION MINIMUM HEIGHTS (INCHES)	FOR DESIGN USE ONLY CATCH BASIN MINIMUM DESIGN DEPTH (FEET)
18	2½	25	59½	4.25
24	3	32	66½	4.79
30	3½	39	73½	5.33
36	4	46	80½	5.88
42	4½	53	87½	6.42
48	5	60	94½	6.96
54	5½	67	101½	7.50
60	6	74	108½	8.04
66	6½	81	115½	8.58
72	7	88	122½	9.13
78	7½	95	129½	9.67

(1) CUT-OUT HOLES BASED ON REINFORCED CONCRETE PIPE WITH WALL TYPE "B".

(2) ALL FLEXIBLE PIPE MATERIALS REQUIRE GASKET. SEE STANDARD DRAWING D-PB-2.

(3) CUT-OUT HOLES FOR PRECAST STRUCTURES TO BE FORMED IN ORDER TO OBTAIN A SMOOTH EDGED HOLE. SCORED OR ETCHED HOLES WITH REINFORCING STEEL LEFT UNCUT WILL NOT BE PERMITTED.

- REV. 2-13-04: CHANGED REINFORCING STEEL IN BASE SECTION.
- REV. 5-5-05: ADDED EXTRA STEEL DIMENSION TO SECTION C-C.
- REV. 8-01-12: REVISED CATCH BASIN FOR COMPLIANCE WITH AASHTO LRFD BRIDGE DESIGN SPECIFICATIONS, 4TH EDITION WITH INTERIMS. REVISED REINFORCING, GENERAL NOTES, LEGEND AND ADDITIONAL MISC. DRAFTING EDITS.
- REV. 3-11-14: ELIMINATED STIRRUPS.

GENERAL NOTES

(A) DRAWING TO BE USED FOR ALL CAST-IN-PLACE NO. 41SE CONCRETE CATCH BASINS AND ALL PRECAST NO. 41SE CONCRETE CATCH BASINS. SEE STANDARD DRAWING D-CB-99 FOR ADDITIONAL CONSTRUCTION NOTES AND DETAILS.

(B) THIS DIMENSION MAY VARY FROM A MINIMUM OF 0 INCHES TO A MAXIMUM OF 24 INCHES AS LONG AS 25 INCHES IS SATISFIED. THE CONTRACTOR HAS THE OPTION OF USING BRICK OR STANDARD PRECAST CONCRETE RISER FRAMES. THE USE OF BRICK SHALL BE LIMITED TO 6 INCHES. IF THIS DIMENSION EXCEEDS 6 INCHES, PRECAST CONCRETE RISER FRAMES SHALL BE USED AS SHOWN ON STANDARD DRAWING D-RF-1.

(C) THIS DRAWING DEPICTS THE MINIMUM HORIZONTAL REINFORCING AT THE TOP OF CATCH BASIN WALLS. SEE ADDITIONAL DETAILS ON STANDARD DRAWING D-CB-99 FOR TALLER SECTIONS AND STEEL PLACEMENT ABOVE PIPE OPENINGS.

(D) CAST-IN-PLACE CONCRETE CATCH BASINS SHALL BE CONSTRUCTED IN ACCORDANCE WITH STANDARD SPECIFICATIONS, SECTION 611 AND/OR SPECIAL PROVISIONS UNLESS SUPERSEDED BY THIS DRAWING. THE CONTRACTOR MAY WITH PERMISSION FROM THE ENGINEER SUBSTITUTE PRECAST CATCH BASINS FOR CAST-IN-PLACE CATCH BASINS PROVIDED THAT ALL PRECAST ELEMENTS MEET ASTM C913 (CURRENT EDITION) UNLESS SUPERSEDED BY THIS DRAWING.

(E) THE FOLLOWING MATERIAL PROPERTIES ARE REQUIRED FOR BOTH CAST-IN-PLACE AND PRECAST STRUCTURES:

CONCRETE: $f_c' = 4{,}000$ POUNDS PER SQUARE INCH AT 28 DAYS
REINFORCING STEEL: ASTM A615, $F_Y = 60{,}000$ POUNDS PER SQUARE INCH
ALL REINFORCING IS TO BE INSTALLED AS DETAILED ON THIS DRAWING.

(F) PRECAST CATCH BASIN UNITS WHICH ARE DAMAGED DURING SHIPMENT OR INSTALLATION WILL BE REJECTED. IT SHALL BE THE RESPONSIBILITY OF THE CONTRACTOR TO REPLACE DAMAGED CATCH BASIN UNITS AT HIS OWN EXPENSE.

(G) APPROPRIATE SIZING AND LOCATION OF LIFTING DEVICES SHALL BE THE RESPONSIBILITY OF THE FABRICATOR.

(H) THE CONTRACTOR IS TO PATCH ALL LIFTING DEVICE HOLES WITH GROUT AND PLACE A MINIMUM OF ONE (1) INCH OF COVER OVER THE HARDWARE OF THESE DEVICES ON BOTH TOP AND BOTTOM SURFACES.

(I) ALTERNATIVE JOINT DETAILS MAY BE ACCEPTABLE. SEE STANDARD DRAWING D-CB-99 FOR ADDITIONAL DETAILS.

(J) SEE ROADWAY PLANS DRAINAGE TABULATION FOR PIPE INLET AND OUTLET ELEVATIONS. IF NEEDED, INVERT ELEVATIONS MAY BE ADJUSTED AS DIRECTED BY THE ENGINEER IN ORDER TO ACCOMMODATE INLET AND OUTLET PIPES.

(K) FOR CASES WHERE THE OUTLET PIPE DIAMETER IS LARGER THAN THE INLET PIPE DIAMETER, A MINIMUM 25 INCH DEPTH SHALL BE MAINTAINED ABOVE THE OUTLET PIPE.

(L) SEE STANDARD DRAWING D-CBB-31 FOR DETAILS REGARDING CAST IRON GRATES, FRAMES AND CURB INLETS.

(M) THE CONTRACTOR MAY ELIMINATE THE A502 BARS BY LENGTHENING THE VERTICAL LEG OF THE H500 BARS SO THAT 1½ INCHES OF CLEAR COVER IS PROVIDED AT THE TOP OF THE STRUCTURE.

(N) PAY DEPTH MEASUREMENT MADE FROM TOP OF GRATE TO OUTLET FLOW ELEVATION. PAYMENT FOR CATCH BASIN WILL BE MADE UNDER ITEM NUMBERS 611-41.02 CATCH BASINS, TYPE 41, > 4'-8' DEPTH THROUGH 611-41.07 CATCH BASINS, TYPE 41, > 24'-28' DEPTH PER EACH. PAYMENT INCLUDES RISER SECTION AND GRATE.

REINFORCING STEEL LEGEND

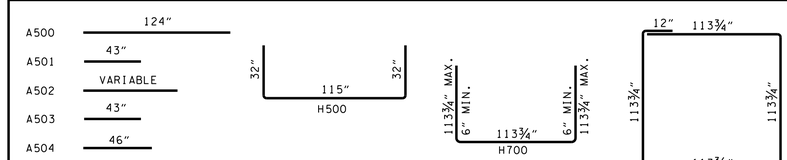

DIMENSIONS SHOWN IN THIS LEGEND ARE OUTSIDE TO OUTSIDE OF BAR. STANDARD C.R.S.I. HOOK AND TIE DETAILS SHALL APPLY, EXCEPT AS NOTED.

☐ MINOR REVISION -- FHWA APPROVAL NOT REQUIRED.

STATE OF TENNESSEE
DEPARTMENT OF TRANSPORTATION

STANDARD
9' X 9' SQUARE
CONCRETE NO. 41
CATCH BASIN
(FOR USE UNDER CONCRETE MEDIAN BARRIER WALL)

NOT TO SCALE | 7-10-02 | D-CB-41SE